WENTYLATOR R2E220

Product drawing

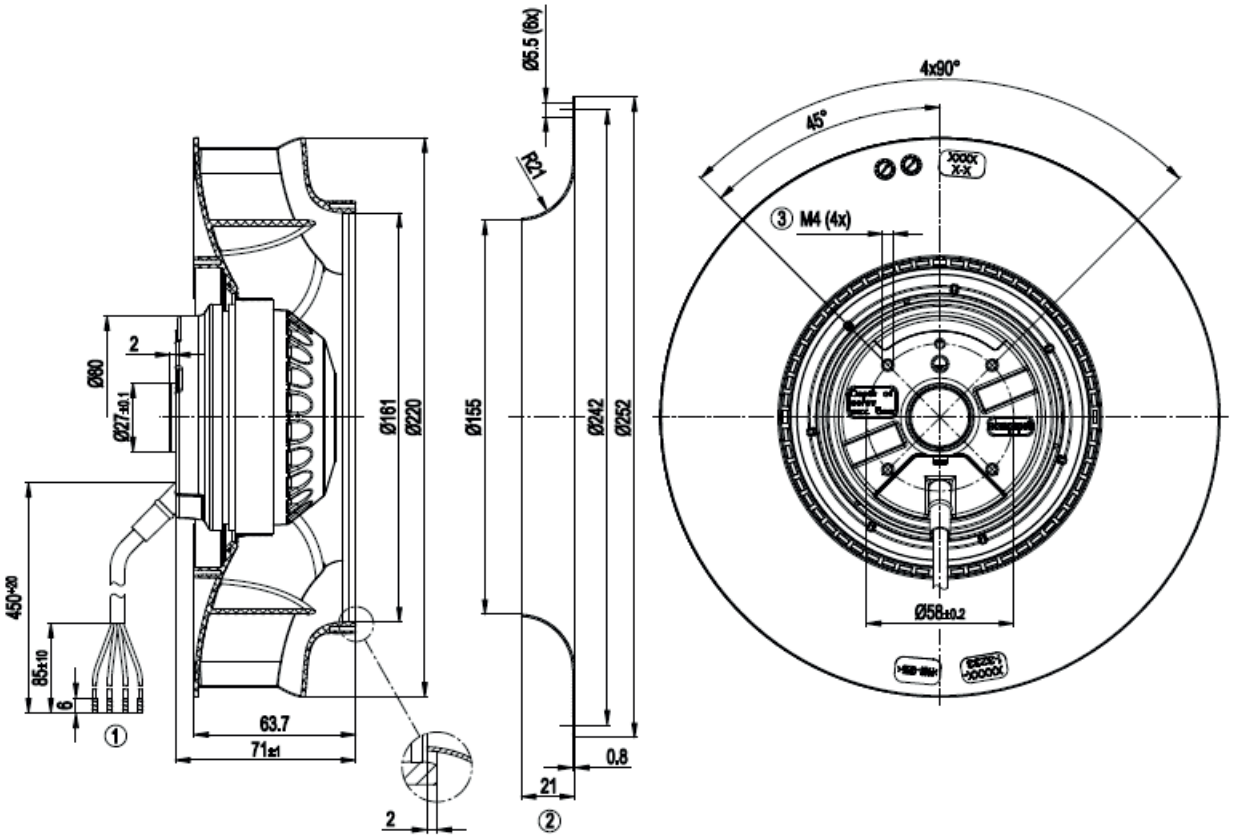

1	Connection line silicone 4G 0.5 mm², 4x brass lead tips crimped
2	Accessory part: Inlet nozzle 09609-2-4013, not included in the standard scope of delivery
3	Depth of screw max. 5 mm

Connection screen

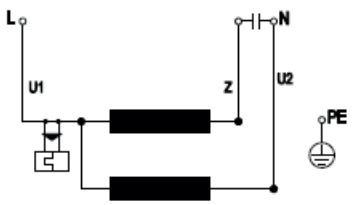

U1	blue	Z	brown	U2	black
PE	green/yellow				